PRESSURE TECH

Hydrogen Fuel Cell Brochure

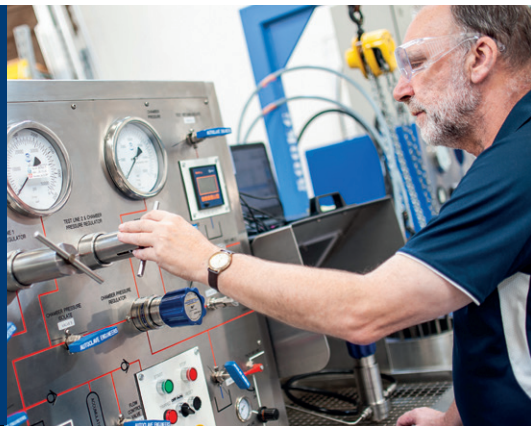

www.pressure-tech.com

Welcome to Pressure Tech

Established in 2000, I am proud to say that Pressure Tech is a family-business with customer service and quality at the heart of our operation. We pride ourselves on having the technical know-how and professionalism typically associated with larger corporate companies.

Based in the North-West UK, our facilities house the entire process from design, manufacturing and assembly through to sales, purchasing and accounts. The Pressure Tech name is now recognised globally for manufacturing high-quality pressure regulators, and we are supported by a worldwide network of Authorised Resellers.

Steve Yorke-Robinson
Managing Director of Pressure Tech

We passionately believe that our products and all-round service represent a market-leading offering, and here's why:

EXPANDING OUR EXPERIENCE

Our team of over 30 people includes a combination of long-term employees offering extensive product experience and understanding of the applications they have been used on, with the more recent addition of employees who have added specialist knowledge in areas such as strategic business management. It is this blend that continues to add strength and value to our core business of designing and manufacturing high-quality pressure regulators.

PARTNERING WITH CUSTOMERS

Whether it's offering general advice or help finding a specific solution to an application, our close-working internal infrastructure allows us to respond to questions promptly and effectively to allow our customers to make quick decisions with confidence. Not every system is the same and sometimes 'off-the-shelf' products may not be suitable for some applications. Our sales and design teams work closely with customers to ensure products are designed to meet their exact needs.

GLOBAL REACH

Our products are used worldwide with 70% being exported for use on critical high-pressure control systems such as wellhead control panels, gas analyser systems, hyperbaric diving systems and the latest hydrogen fuel cell technology. We continually listen to customer feedback to ensure product realisation is achieved. Our products are supplied to an ever-increasing customer base ranging from family businesses like our own to blue chip multinationals, meaning we offer a personal touch combined with the capacity to fulfil larger projects.

In-House Capabilities...

QUALITY

As a company we have always understand the critical importance of maintaining quality throughout our business. We constantly aspire to provide products and services that not only meet, but exceed the requirements of our customers.

It is our long-term commitment to quality that has created a 'quality culture' here at Pressure Tech. When decisions are made, be it to the design of a product, the sourcing of raw materials, or the processes under which we operate, quality and the requirements of our customers are of primary consideration.

DESIGN

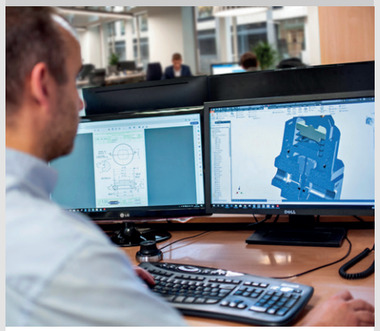

We take great pride in being able to design bespoke solutions to fulfil customer requirements. This in-house service is one of the many reasons why existing customers come back to us time and again, and why, off the back of recommendations, new customers approach Pressure Tech when an off-the-shelf product just won't suffice.

MANUFACTURING

Our in-house machine shop is operated by an experienced team of machinists and is overseen by our Operations Manager. Regular investments in machinery ensure we have the capacity to maintain stock of 'standard' components for competitive lead times, and to provide the production flexibility to quickly respond to urgent customer requirements.

ASSEMBLY

Our in-house team of skilled assembly and testing engineers work closely with our design and manufacturing departments, whilst workload is strategically managed and scheduled by our Planning Manager using the latest shop-floor loading software. This strategic approach ensures customer orders are fulfilled on-time.

Expanding Our Horizons...

Pressure Tech is renowned across the world for manufacturing high quality and competitively priced pressure regulators for the oil and gas market. Our longevity in this market has led to customers returning to us time after time for advice and guidance on new projects, system upgrades and alterations.

As the global shift towards minimising dependence on fossil fuels has gathered pace, the importance of establishing an appropriate infrastructure to support the large-scale production of hydrogen has been well publicised.

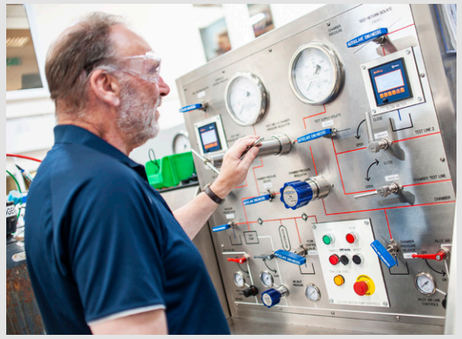

Since 2017, at Pressure Tech, we have expanded our focus from applications solely within the oil and gas sector to a combination that now incorporates the hydrogen fuel cell (H2FC) market. Our first step was the development of our LW351 pressure regulator. We utilised over 20 years worth of product development experience to create a regulator for the UAV Drone market that was lightweight, compact, and capable of accurately and carefully controlling outlet pressures to protect the drone's fuel cell.

Since then we have made the important step of employing a specialist H2FC Business Development Manager who has steered the growth of our product range to support a wider range of applications including passenger vehicles, buses, trucks, refuelling stations and recreational vehicles, amongst many others.

LW351

FOR UAV DRONES
Lightweight and compact pressure regulator designed to provide constant supply pressure to the UAV drone's fuel cell.

Compatible with CV414-SC cylinder valve.

PAGE 05

CV414-SC

TPED APPROVED

FOR GAS CYLINDERS
TPED approved self-closing cylinder valve for high pressure gas systems with a quick low torque disconnect feature to isolate the gas supply even under high pressure.

PAGE 07

AUTO438

EC79 APPROVED

FOR BUSES AND TRUCKS
EC79 approved pressure regulator with up to 438 bar inlet pressure, the AUTO438 offers stable control of outlet pressures.

PAGE 09

AUTO875

FOR PASSENGER VEHICLES
High pressure design and safety features for use on passenger vehicles. Up to 875 bar (12,690 psi) inlet and 20 bar (290 psi) outlet pressures.

PAGE 11

RF1034

FOR REFUELLING STATIONS
For accurate/stable control of the high pressures required by H2 refuelling stations. Features Cv 0.3 for fast refuelling.

PAGE 13

LW438

FOR MATERIAL HANDLING
Lightweight aluminium regulator for use on material handling applications such as forklifts with up to 438 bar (6,350 psi) inlet pressure.

PAGE 15

BP301

FOR ELECTROLYSERS
Accurately controls across various flow rates the pressure of hydrogen gases produced during the electrolysis process.

PAGE 17

LW-TS414

FOR SHELL ECO-MARATHON
Lightweight aluminium two-stage regulator for very stable pressure control on automotive vehicles competing in Shell Eco-Marathon and H2 applications requiring two-stage let-down.

PAGE 19

Specifications...

LW351 Regulator — Weight: 0.2kg (2.2lbs) — Height: 107mm (4.2”) — Width: 40mm (1.6”)

TYPICAL PORT SIZE	CV	SERVICE	MAX INLET	SEAT	MAX OUTLET	SENSING ELEMENT	VENTING OPTION
1/8”	0.06	Hydrogen	350 bar (5,075 psi)	PCTFE	3 bar (45 psi)	Piston	Non

INTRODUCTION

Hydrogen fuel cell UAV drones are used for a growing range of applications including offshore inspection, search and rescue, aerial photography and mapping, and many more. One of the key reasons why hydrogen fuel cells are chosen to power drones is flight endurance - which places critical importance on minimising the weight of all its components.

The LW351 was the first product brought to market in the hydrogen fuel cell sector under the Pressure Tech brand, with UAV drones being our target market after collaboration with a world leading fuel cell company based in the UK. Its key features include:

LIGHTWEIGHT AND COMPACT

With an aluminium body the LW351 weighs just 0.2kg or 200g and measures just over 100mm (height), making it the perfect regulator solution for applications where every grams matters.

0.15% DECAYING PRESSURE EFFECT

With a low decaying pressure effect, the LW351 offers stable control even under depleting gas supply conditions.

WIDE RANGE OF CONNECTION OPTIONS

Customers may choose to direct mount the LW351 to their gas cylinder, add a valve connection adaptor to join to a cylinder valve such as our CV414-SC, or opt for an NPT or BSPP thread.

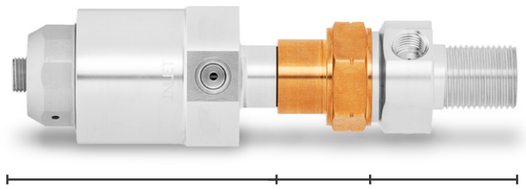

SEE PAGE 07 ▶

APPLICATIONS

Whilst initially introduced for the UAV drone market, the LW351’s lightweight and compact design has also appealed to a growing number of customers and their applications, including:

- UAV Drones
- Bicyles
- Cargo Bikes
- Recreational Vehicles, e.g. Golf Carts
- Portable Fuel Cell Systems
- Stationary Back-Up Power

ABOVE: PHOTO COURTESY OF **INTELLIGENT ENERGY**

Flow Curve...

Even as the hydrogen tank depletes, the LW351 retains a tight control over outlet pressure with very accurate flow.

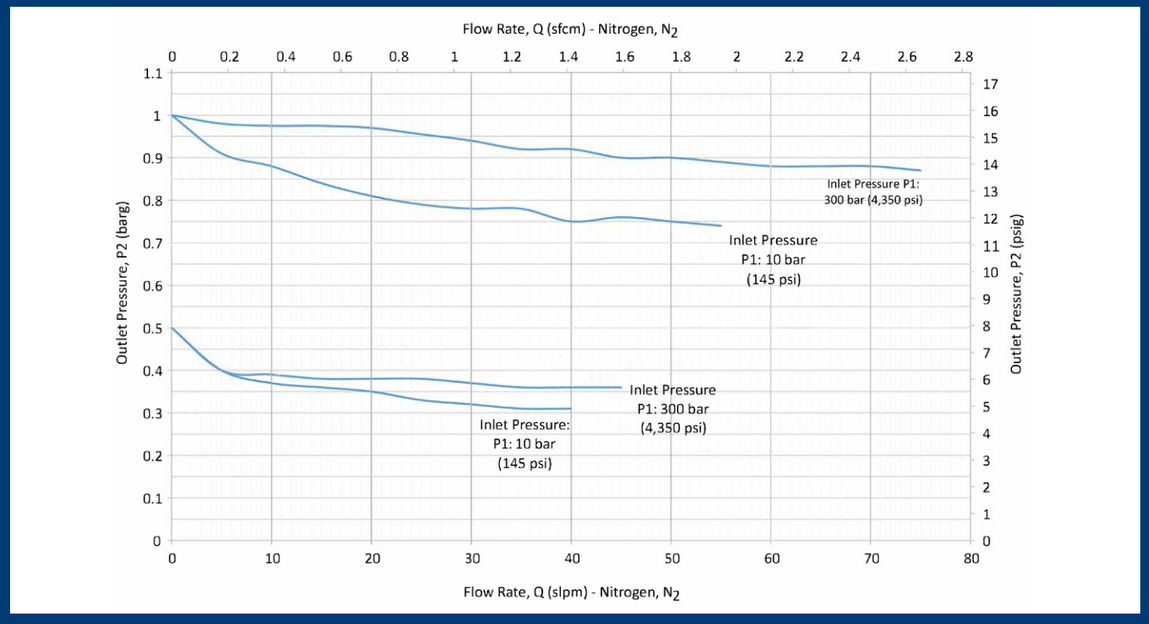

Specifications...

CV-414-SC Cylinder Valve	Weight: 0.14kg (0.3lbs)	Height: 50mm (2")	Width: 29mm (1.1")			
TYPICAL PORT SIZE	TYPE	CV	SERVICE	MAX INLET	SEAT	APPROVAL
5/8" M18	Self-Closing	0.06	Hydrogen	350 bar (5,075 psi)	PCTFE	TPED
				414 bar (6,000 psi)	PEEK™	-

INTRODUCTION

Gas cylinders or bottles are used for a wide range of applications and enable a system or product to be powered by a gas without being fixed to a fixed fuelling point, offering the advantage of portability. The key to this advantage is ensuring that the gas cylinder can safely, quickly and conveniently refilled when required.

The CV414-SC was designed to do just that. Sold in conjunction with our LW351 pressure regulator, or available to purchase separately to connect to an exisiting application or system, the CV414-SC is a TPED approved self-closing cylinder valve with features including:

TPED 2010/35/U APPROVED

TPED is a certification required for applications involving the transportation of pressure equipment including gas cylinders and their valves. The CV414-SC is certified for up to 350 bar (5,075 psi).

EASY DISCONNECT FEATURE

The CV-414-SC offers a low torque design, allowing users to quickly and easily disconnect the gas cylinder (with the CV414-SC still attached) when a refill is required.

CONTINUAL OPERATION

When the CV414-SC is attached to the gas cylinder and connected to the system, it provides a continual supply of hydrogen for continual operation.

OPTIONAL BURST DISC

We have a range of bursting discs available to order separately with a choice of threads and to suit cylinders rated to between 300 bar (4,350 psi) and 414 bar (6,000 psi).

APPLICATIONS

The CV414-SC has been designed to connect gas cylinders to a wide range of high pressure hydrogen fuel cell applications or systems that require this portable fuel source to fuel their operation. It is also designed to work with our LW351 pressure regulator via a Valve Connection Adapter for quick and convenient hydrogen refilling, and for pressure isolation purposes.

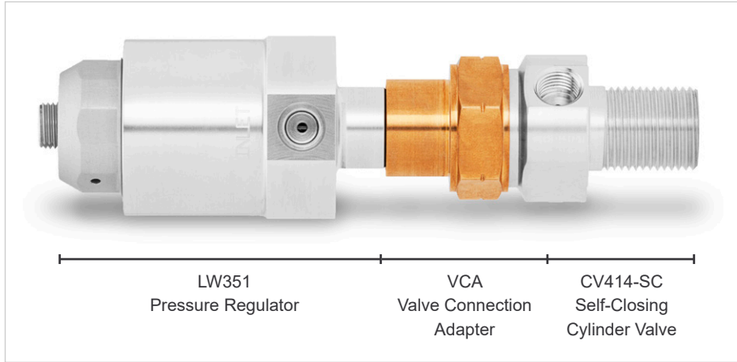

TPED (2010/35/EU) Approved...

The Transportable Pressure Equipment Directive (TPED) is a European Directive (1999/36/EC) designed to ensure that all pressure equipment to be transported under pressure can be manufactured, sold and used throughout the EU.

WHAT IS INCLUDED IN THE TPED TESTING PROCESS?

The comprehensive EC79 testing process features a number of extensive tests conducted over a period of several weeks. Some of the component of the testing programme include:

1 Burst Test
Hydraulic burst test at 2.25x rated pressure, i.e. tested at 788 bar (11,430 psi).

2 Leak Test
Internal and external leak tightness testing at various stages between -40°C and +65°C.

3 Cycle Test
2000 cycle endurance testing at 1.2x rated pressure, i.e. tested at 420 bar (6,090 psi).

4 Drop Test
Conducted at 1.2m height.

5 Investment
The certification process required a significant financial and resource investment to see the project through to completion.

Specifications...

EC79 APPROVED

AUTO438 Regulator	Weight: 1.8kg (4lbs)	Height: 139mm (5.5”)	Width: 71mm (2.8”)				
TYPICAL PORT SIZE	CV	SERVICE	MAX INLET	MAX OUTLET	SENSING ELEMENT	VENTING OPTION	APPROVAL
1/4”, 3/8”, 1/2”, SAE 3/4/6/8	0.5	Hydrogen	438 bar (6,350 psi)	20 bar (290 psi)	Piston	Non	EC79

INTRODUCTION

As a leading alternative to fossil fuels, hydrogen fuel cells are being increasingly chosen to power vehicles such as trucks, buses and light aircraft. Within the hydrogen fuel cell system, the pressure regulator plays an important role in feeding the fuel cell with a stable supply of hydrogen.

Without the regulator, the high presssure hydrogen tank would release the hydrogen at pressures which would damage the fuel cell beyond repair. To go a step further, the regulator must reliably and repeatedly provide very stable outlet pressures to protect the fuel cell from pressure spikes - these can have an equally devastating consequences on the fuel cell.

From the design concept stage, the AUTO438 was crafted specificially with this market in mind; it is as technically adept as it is safety conscious. Its key features include:

EC79/2009 APPROVED

During the EC79 testing process, it was put through 90,000 cycles by external certification body, KIWA Nederland B.V. - equating to 10 years life time on a typical installation!

EASY ACCESS TO SEAT CARTRIDGE

When it is time to perform routine servicing, convenient access through the base of the regulator ensures it is not necessary to remove the regulator from its position in the system to conclude the maintenance.

IN-LINE LEAKAGE SENSE LINE

The AUTO438 features easy to connect pipework to sense for H2 leakage, and makes the set point anti-tamper proof.

APPLICATIONS

With a maximum inlet pressure of up to 438 bar (6,350 psi), piston sensing mechanism and a sleek and robust design, the AUTO438 is the perfect match for a number of applications, including:

- Trucks (3 - 7 tonnes)
- Buses
- Vans
- Large Material Handling Vehicles
- BEV (Battery Electric Vehicle) Range Extenders
- Stationary Back-Up Power (Telecoms)
- Light Aircraft Testing

EC79/2009 Certified...

Our AUTO438 pressure regulator has successfully been put through the stringent EC79 testing process by independent Dutch testing, inspection and certification specialists, KIWA Nederland B.V., approving it for use on hydrogen fuel cell vehicles.

WHAT IS INCLUDED IN THE EC79 TESTING PROCESS?

The comprehensive EC79 testing process features a number of extensive tests conducted over a period of several weeks. Some of the key numbers include:

1 — 144-Hour
Salt-spray and ammonia emersion corrosion resistance test.

2 — 90,000
Hydrogen gas cycle tests, equating to 10 years’ service.

3 — 150,000
Water cycle tests.

4 — Frequent
Internal and external leak tightness testing.

5 — Investment
The certification process required a significant financial and resource investment to see the project through to completion.

EC79 APPROVED

Specifications...

AUTO875 Regulator	Weight: 2.7kg (6lbs)	Height: 139mm (5.5”)	Width: 69mm (2.7”)				
TYPICAL PORT SIZE	CV	SERVICE	MAX INLET	SEAT	MAX OUTLET	SENSING ELEMENT	VENTING OPTION
1/4”	0.5	Hydrogen	875 bar (12,690 psi)	PEEK™	20 bar (290 psi)	Piston	Non

INTRODUCTION

Car pollution is a major contributor to global warming but when hydrogen is generated using clean, renewable power, its environmentally friendly qualities have helped boost the rise of hydrogen fuel cell vehicles as a genuine alternative to conventional combustion engines. In addition, fast refuelling times for hydrogen vehicles offer them a competitive edge over their electric counterparts.

Due to its low molecular weight, hydrogen leaks far more easily than other gases, and in combination with its highly flammable nature, it is essential that the components within the hydrogen fuel cell system are carefully designed with safety in mind.

The AUTO875 was designed specificially for this market - its key features include:

DOUBLE O-RING

The o-ring is a simple yet crucial part of the regulator’s design. The AUTO438 features a safety back-up o-ring to offer extra protection in the event of primary o-ring failure during use.

EASY ACCESS TO SEAT CARTRIDGE

When it is time to perform routine servicing, convenient access through the base of the regulator ensures it is not necessary to remove the regulator from its position in the system to conclude the maintenance.

HIGH PRESSURE

The AUTO875 accepts high inlet pressures of up to 875 bar (12,690 psi).

APPLICATIONS

With a maximum inlet pressure of up to 875 bar (12,690 psi), the AUTO875’s high performance 316 stainless steel body and piston sensing mechanism are designed for hydrogen fuel cell applications requiring higher pressures. These applications primarily include:

- Passenger Vehicles
- Large Trucks
- Small Aircraft

Electronic Accessories...

It is possible to connect a variety of devices as optional extras to the AUTO875’s ports to add electronic controls such as transducers, solenoid valves and TPRDs.

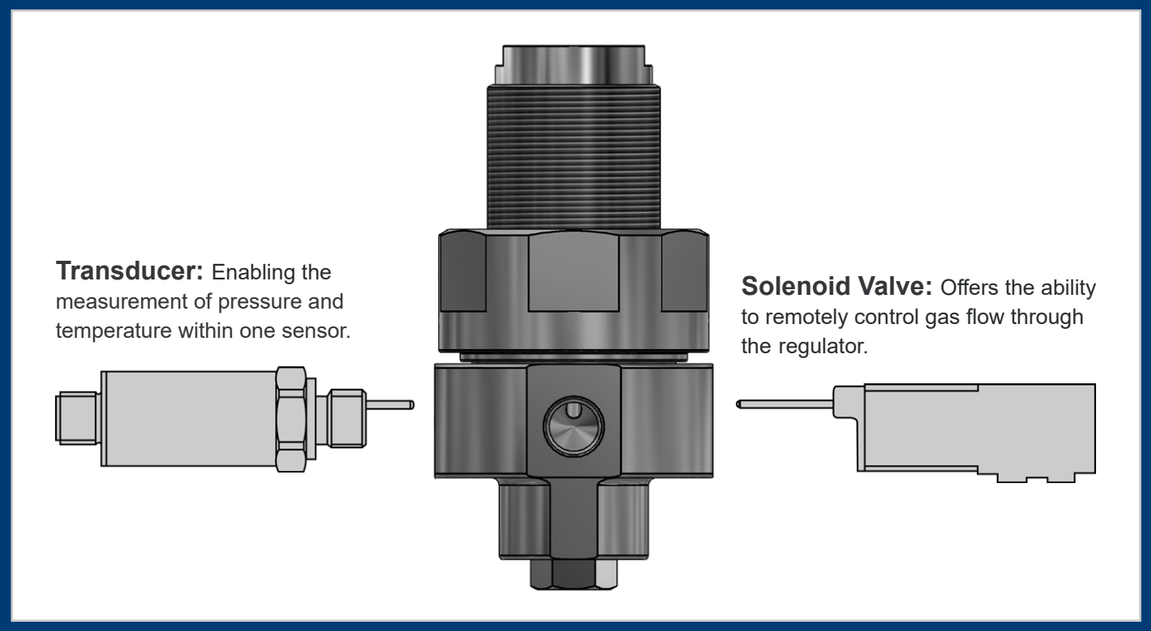

Specifications...

RF1034 Regulator	Weight: 4.8kg (11lbs)	Height: 230mm (9.1”)	Width: 150mm (5.9”)				
TYPICAL PORT SIZE	CV	SERVICE	MAX INLET	SEAT	MAX OUTLET	SENSING ELEMENT	VENTING OPTION
3/8” 9/16”	0.3	Hydrogen	1,034 bar (15,000 psi)	PEEK™	1,034 bar (15,000 psi)	Piston	Non

INTRODUCTION

To encourage the manufacture and uptake of hydrogen fuel cell vehicles, the infrastructure and supply network to support them is critical, as is the availability of hydrogen refuelling stations. By the end of 2019 there were 432 hydrogen refuelling stations in operation worldwide. Japan (114) offers the largest number in the world, with Germany (87) hosting the largest number in Europe.

Refuelling stations store the hydrogen in high pressure tanks until there is a demand for the fuel. The pressure regulator must ensure the hydrogen is delivered to the vehicle within the pressure requirements of the vehicle’s fuel cell, and be able to handle temperatures down to -40°C or 104°F.

The RF1034 pressure regulator was designed specifically for the refuelling market - its key features include:

FAST REFUELLING TIMES

The RF1034 features a Cv of 0.3 to enable ultra convenient fast refuelling times.

EASY ACCESS TO SEAT CARTRIDGE

When it is time for routine servicing, convenient access through the base of the regulator ensures it is not necessary to remove the regulator from its position in the system to conclude the maintenance.

PISTON SENSING ELEMENT

With a piston sensed design, the RF1034 is perfect for use with hydrogen media.

APPLICATIONS

With a robust design, Cv 0.3 for fast flow and a capability of handling maximum inlet and outlet pressures of up to 1,034 bar (15,000 psi), the RF1034 pressure regulator is perfectly suited to:

- Hydrogen Refuelling Stations

Optional Automated Remote Control...

For some applications where it is either difficult to obtain access to, or where it is more desirable to remotely control the pressure regulator, we also offer an optional compact electric actuator. Our remote solution features a fully closed loop servo motion system for controlled precision.

In addition to refuelling and other topside or unmanned applications, this automated control option is also suitable for subsea applications down to depths of up to 3,000m or 10,000ft.

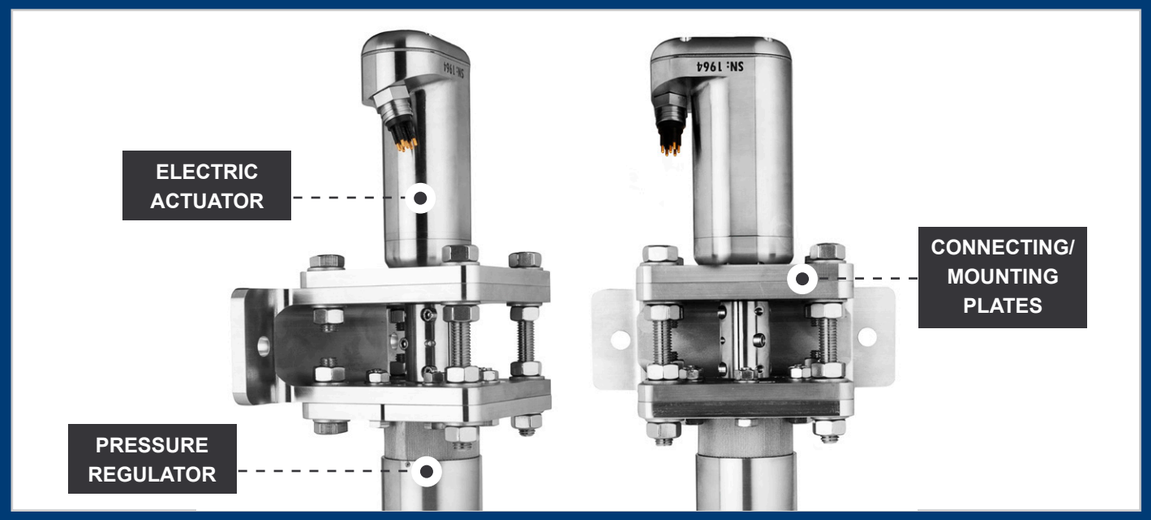

Specifications...

LW438 Regulator — Weight: 0.39kg (0.86lbs) — Height: 115mm (4.5”) — Width: 46mm (1.8”)

TYPICAL PORT SIZE	CV	SERVICE	MAX INLET	SEAT	MAX OUTLET	SENSING ELEMENT	VENTING OPTION
SAE-4	0.06	Gas	438 bar (6,350 psi)	PEEK™	20 bar (190 psi)	Piston	Non

INTRODUCTION

Traditionally, material handling equipment such as forklifts have utilised internal combustion engines but over recent years, the use of electrically-powered variations has grown in popularity. The drive to source alternative sustainable renewable energy solutions has seen the emergence of hydrogen in the material handling sector.

With zero carbon emissions making them a perfect energy source for use in enclosed spaces and the convenience of quick refuelling times, hydrogen fuel cells are making fast inroads into this sector.

To cater for the requirements of this hydrogen fuel cell application, key design aspects of our LW351 and AUTO438 regulators were taken and combined to develop our LW438 pressure regulator. We took the lightweight attributes of our LW351 and the higher inlet pressures of our AUTO438 as starting points to develop the LW438 regulator.

Its key features include:

LIGHTWEIGHT DESIGN

With an aluminium body the LW-TS414 weighs just 0.54kg or 1.2lbs for a lightweight pressure control solution.

HIGHER PRESSURE

The LW438 accepts maximum inlet pressures of up to 438 bar (6,350 psi).

APPLICATIONS

With a maximum inlet pressure of up to 438 bar (6,350 psi), the LW438 also features a lightweight design for hydrogen fuel cell material handling applications. These applications primarily include:

- Forklifts
- Pallet Jacks

www.pressure-tech.com

Specifications...

BP301 Regulator — Weight: 0.9kg (2lbs) | Height: 135mm (5.3”) | Width: 55mm (2.2”)

TYPICAL PORT SIZE	CV	SERVICE	MAX RATING	SEAT	CONTROL RANGE	SENSING ELEMENT
1/4”	0.1	Hydrogen	150 bar (2,175 psi)	PCTFE	150 bar (2,175 psi)	Piston

INTRODUCTION

An electrolyser produces hydrogen through a chemical process that uses electricity to separate water into H_2 and O_2 molecules. If renewable energy is used to power the electrolysis process, this is considered to be ‘green hydrogen’.

There are different types of electrolyser available including Alkaline, Proton Exchange Membrane (PEM) and Solid Oxide Electrolysis Cell (SOEC). Packing together multiple electrodes produces a greater amount of hydrogen in a smaller footprint.

Back pressure regulators, such as our BP301, added to electrolyser systems off accurate and reliable pressure regulation to enhance the efficiency and life span of the electrolyser.

Its key features include:

ACCURATE PRESSURE CONTROL

With a piston sensing mechanism and PCTFE seat, the BP301 offers very accurate and reliable pressure control.

LIGHTWEIGHT DESIGN

With a compact design, the BP301 weighs just 0.9kg or 2lbs for a lightweight pressure control solution.

WIDE SELECTION AVAILABLE

The BP301 is a popular choice for electrolysis systems, but we also have a full range of back pressure regulators to suit a wide selection of control pressures and flow rates.

SPECIALISED CLEANING

Additionally we are able to clean and degrease to ASTM G93 Level C which is for equipment used in oxygen-enriched environments.

APPLICATIONS

In addition to our BP301, we have a full range of back pressure regulators for use on Electroysis systems offering port sizes from 1/4” to 3/4” and Cv from 0.1 to 3.0:

	PORT	CV	RATING	CONTROL
BP010	1/4”	0.1	10 bar	5 bar
BP-LF540	1/4”	0.1	550 bar	414 bar
BP-LF690	1/4”	0.1	550 bar	414 bar
BP-LF691	1/4”	0.1	1,034 bar	900 bar
BP-MF690-05	1/2”	0.5	550 bar	414 bar
BP-MF690-15	3/4”	1.5	690 bar	300 bar
BP-MF400	1/2”	3.0	10 bar	10 bar
BP-MF401	1/2”	3.0	400 bar	200 bar

Pressure Control During Electrolysis

During the electrolysis process, hydrogen forms on the cathode side of the electrolyser and oxygen forms on the anode side. On the oxygen side, our in-house cleaning facility is equipped to clean and degrease the regulator to ASTM G93 Level C.

Pressure Tech forward-reducing and back pressure regulators offer precise and reliable pressure control for both hydrogen and oxygen gases. Forward reducing regulators ensure the system on the downstream side receives controlled pressure at the required level, whilst back pressure regulators maintain upstream pressures.

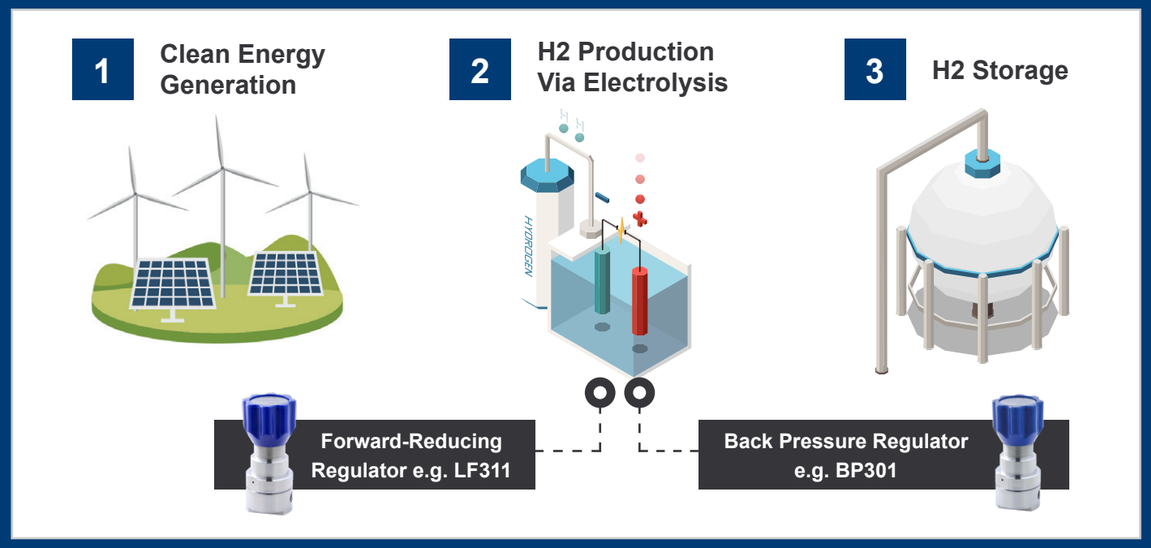

Specifications...

LW-TS414 Regulator — Weight: 0.54kg (1.2lbs) — Height: 153mm (9.1”) — Width: 48mm (1.9”)

TYPICAL PORT SIZE	CV	SERVICE	MAX INLET	1ST STAGE SEAT	MAX OUTLET	SENSING ELEMENT	VENTING OPTION
1/4”	0.06	Hydrogen	300 bar (4,350 psi)	PCTFE	1 bar (14.5 psi)	Piston	Non
			414 bar (6,000 psi)	PEEK™			

INTRODUCTION

The Shell Eco-Marathon (SEM) is an annual energy efficiency competition for High School and University students. The aim for each team is to design and build an automotive vehicle to achieve the highest possible fuel efficiency. Within the hydrogen catgeory, there are two vehicle classes - Prototype and Urban Concept - with prizes are awarded for each vehicle class. Mercede-Benz World in London hosts the European event with participants challenged to complete 11 laps (15.6km) in a maximum time of 39 minutes using one litre of hydrogen. The team registering the most energy efficient attempt is crowned champion.

The teams secure financial sponsorship to fund day-to-day running costs and collaborate with manufacturers, such as Pressure Tech, to supply the components required to complete the vehicle build. They then also have access to the manufacturers’ technical experience to understand how best to integrate the component for maximum performance gains.

Each year we work with several teams offering financial sponsorship and the supply of our LW-TS414 - Pressure Tech’s SEM pressure regulator. It is the regulator’s responsibility to protect the fuel cell from any fluctuations in pressure. Its key features include:

TWO-STAGE LET-DOWN DESIGN

The LW-TS414’s two-stage design offers very accurate pressure control through two-stages of pressure reduction.

LIGHTWEIGHT DESIGN

With an aluminium body the LW-TS414 weighs just 0.54kg or 1.2lbs for a lightweight pressure control solution.

0.04% DECAYING PRESSURE EFFECT

With a low decaying pressure effect, the LW-TS414 offers very stable control even under depleting gas supply conditions.

APPLICATIONS

Its lightweight design and extremely accuarate two-stage let-down process are perfect for applications requiring these characteristics, although the LW-TS414 has been primarily designed for:

• Shell Eco-Marathon

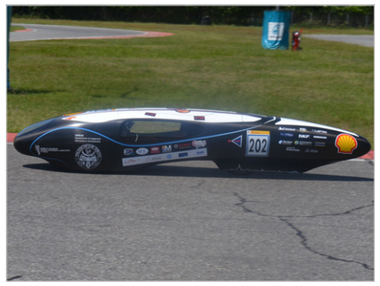

The Shell Eco-Marathon Competition

Since 2018, Pressure Tech has played a part in the annual European Shell Eco-Marathon race through a sponsorship commitment and and collaboration with a number of teams competing in the event. In addition to financial contributions to assist with the development and running of the teams throughout the year, we also provided pressure regulators to each team to use within each vehicle’s fuel cell system.

WORKING IN COLLABORATION...

One of the main advantages to working with teams from the Shell Eco-Marathon for a number of years is the ongoing product feedback we have received.

Our lightweight and two-stage LW-TS414 was created in 2020 specifically for the Shell Eco-Marathon competition. It became apparent that a two-stage regulator offering even greater precision on the outlet would offer more robust protection of the hydrogen fuel cell.

Its lightweight aluminium body was also a ‘must have’ feature. In an application where every gram added may result in slower track times and reduced efficiency, ensuring the LW-TS414’s weight was kept to a minimum was essential.

With an in-house design team, product development is an ongoing process to ensure the LW-TS414 remains fine tuned to the requirements of vehicle.

PRESSURE TECH

APR 2022

PRESSURE TECH LTD
Unit 24, Graphite Way, Hadfield, Glossop, Derbyshire, UK, SK13 1QH
T +44 (0)1457 899 307
E sales@pressure-tech.com
W www.pressure-tech.com

DESIGNED, MANUFACTURED AND BUILT IN THE UK